FRESE A SGROSSARE

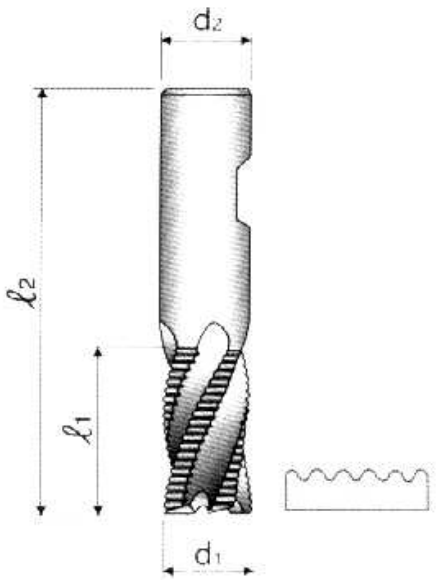

STANDARDS

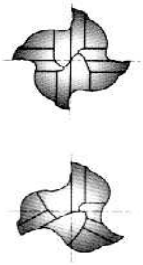

ART.FGH

CODICE	d1	L1	L2	d2	EURO	Ticn-Futura
FGHS06	6	16	60	6		
FGHS07	7	22	72	10		
FGHS08	8	25	75	10		
FGHS09	9	25	75	10		
FGHS10	10	28	78	10		
FGHS11	11	28	85	12		
FGHS12	12	32	89	12		
FGHS13	13	32	89	12		
FGHS14	14	32	89	12		
FGHS15	15	36	96	16		
FGHS16	16	36	96	16		
FGHS18	18	40	100	16		
FGHS20	20	45	111	20		
FGHS22	22	45	111	20		
FGHS25	25	50	126	25		
FGHS32	32	63	139	32		

Centro Utensili Pontassieve srl
Via Lisbona, 37 - 50065 Pontassieve (FIRENZE) Toscana - Italia

Website: www.centroutensilipontassieve.it
E-Mail: info@centroutensilipontassieve.it
Tel.: 0558368556 - Fax: 0558316751